NED UNIVERSITY OF ENGINEERING & TECHNOLOGY
SECOND YEAR FALL SEMESTER (PETROLEUM/ ELECTRICAL ENGINEERING)
EXAMINATION 2016
BATCH 2014-15 & PREVIOUS BATCHES

Time: 3 Hours

Dated: 17-11-2016
Max. Marks: 60

PROBABILITY & STATISTICS- MT-331

INSTRUCTIONS:

- Attempt any five questions.
- Statistical annexures will be provided on demand.

0.787

Q. No.1 (a) From the following frequency distribution calculate mean, median and mode? (06)

Class Boundaries	0 – 5	5 – 10	10 – 15	15 – 20	20 – 25
Frequency	10	20	30	20	10

(b) A study is being made of the failures of an electronic component. There are four types of failures possible and two mounting positions for the device. The following data have been taken. Would you conclude that the type of failure is independent of the mounting position? Use $\alpha = 0.01$ (06)

Chi

	Failure Type			
Mounting Position	A	B	C	D
1	22	46	18	09
2	04	17	06	12

Q. No.2 (a) A study was made by a retail merchant to determine the relation between weekly advertising cost and sales. The following data were recorded, Find the equation of the linear Regression line $y = a + bx$ and also estimate the weekly sales when advertising costs are \$35. (06)

Adv. Cost ($)	40	20	25	20	30	50	40	20	50	40
Sales ($)	385	400	395	365	475	440	490	420	560	525

(b) Compute and interpret the linear correlation coefficient and rank correlation coefficient of the following grades of 6 students selected at random (06)

Mathematics grade	70	92	80	74	65	83
English grade	74	84	63	87	78	90

Q. No.3 (a) A machine produces metal rods used in an automobile suspension system. A random sample of 15 rods is selected, and the diameter is measured. The resulting data (in millimeters) are as follows, Test the hypothesis that population mean of diameter is at least 8.25? Use 5% level of significance. (06)

8.24	8.25	8.20	8.23	8.24
8.21	8.26	8.26	8.20	8.25
8.23	8.23	8.19	8.28	8.24

(b) A random sample of 64 bags of white Cheddar popcorn weighed, on average, 5.23 ounces with a standard deviation of 0.24 ounces. Test the hypothesis that $\mu = 5.5$ ounces against the alternative hypothesis, $\mu < 5.5$ ounces at the 0.05 level of significance. (06)

Q. No.4 (a) In the senior year of a high school graduating class of 100 students, 42 studied mathematics, 68 studied psychology, 54 studied history, 22 studied both mathematics and history, 25 studied both mathematics and psychology, 7 studied history but neither mathematics nor psychology, 10 studied all three subjects, and 8 did not take any of the three. Randomly select a student from the class and find the probabilities of the following events. (06)

(1) A person enrolled in psychology takes all three subjects.
(2) A person not taking psychology is taking both history and mathematics.

P.T.O

(b) An assembler of computer terminals and modems uses parts from three sources company A, B and C supplies 35%, 45% and 20% of the total parts respectively, from past experience assembler knows that 6%, 3% and 1% parts supplied by company A, B and C are defective, if a modem is selected randomly and found defective, which of the three companies A, B and C is more likely (highest probability) to have supplied the defective modem? (06)

Q. No.5 (a) If 7 cards are drawn from 52 playing cards what is probability that at least 1 of them will be a queen? (03)

(b) Probability that certain kind of electronic component survives a shock test is 0.1. Find probability that the second electronic component that survive a shock test will be the fifth one? (03)

(c) The finished inside diameter of a piston ring is normally distributed with a mean of 10 centimeters and a standard deviation of 0.03 centimeter. (06)

(1) What proportion of rings will have inside diameters exceeding 10.075 centimeters?
(2) What is the probability that a piston ring will have an inside diameter between 9.97 and 10.03 centimeters?
(3) Below what value of inside diameter will 15% of the piston rings fall?

Q. No.6 (a) The life span in hours of an electrical component is a random variable with cumulative distribution function. (06)

$$F(x) = 1 - e^{-\frac{x}{10}}, \quad x > 0$$

Determine its probability density function and also find the probability that the life span of such a component will exceed 70 hours.

(b) The length of time, in minutes, for an airplane to obtain clearance for takeoff at a certain airport is a random variable $Y = 3X - 2$, where X has the density function, (06)

$$f(x) = \frac{1}{4}e^{-x/4}, \quad x > 0$$

Find the mean and variance of the random variable Y.

Q. No.7 (a) Use the method of least squares to determine the constants a and b such that $y = a\,e^{bx}$ fits the following data and also estimate y when $x = 6$ (06)

x	1	5	7	9	12
y	10	15	12	15	21

(b) The life, in years, of a certain type of electrical switch has an exponential distribution with an average life $\beta = 2$. If 100 of these switches are installed in different systems, what is the probability that at most 30 fail during the first year? (06)

p.d.f of exponential distribution is :

$$f(x;\beta) = \frac{1}{\beta}e^{-\frac{x}{\beta}}, \quad x > 0, \quad \beta > 0$$

--------- X ---------

NED UNIVERS-
S.U(E)

NED UNIVERSITY OF ENGINEERING & TECHNOLOGY
SECOND YEAR (ELECTRICAL ENGINEERING)
FALL SEMESTER MID TERM EXAMINATION 2016
BATCH 2014-2015

Time: 50 Minutes

Dated:
Max. Marks: 20

PROBABILITY & STATISTICS - (MT-331)

Attempt All Questions

Q. No.1 Following data represents final examination scores of 50 students for statistics course.

57	61	57	57	58	57	61	54	68	50
51	49	64	50	48	65	52	56	46	45
54	49	50	47	55	55	54	42	51	62
56	55	54	51	60	62	43	55	56	55
61	52	69	64	46	54	53	41	70	59

5 × 10 = 50

(a) Construct split stem-leaf display of data (02)

(b) Construct frequency distribution using class intervals 40 -- 44, 45 -- 49 ... also construct relative and cumulative frequency distributions. (04)

(c) Using frequency distribution find mean, median, mode, coefficient of skewness and comment on the shape of distribution. (04)

Q. No.2 (a) An electrical system consists of six components as illustrated in figure. Probability of working of each component is also shown in figure. Assume that all components work independently. What is probability that the entire system work? If entire system works then what is probability that component B is not working? (05)

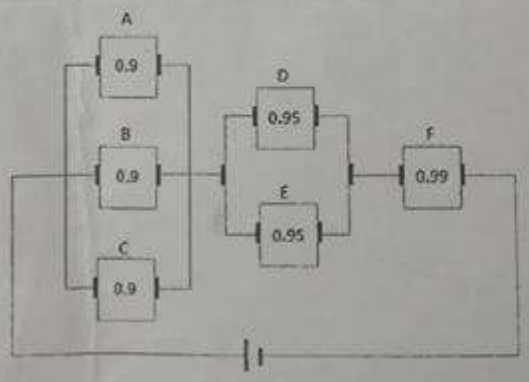

(b) Police plan to enforce speed limits by using radar traps at four different locations within the city limits. The radar traps at each of the locations $L1$, $L2$, $L3$, and $L4$ will be operated 40%, 30%, 20%, and 30% of the time. If a person who is speeding on her way to work has probabilities of 0.2, 0.1, 0.5, and 0.2, respectively, of passing through these locations, what is the probability that she will receive a speeding ticket? If the person received a speeding ticket on her way to work, what is the probability that she passed through the radar trap located at $L2$? (05)

DNE